Edward Herbert Designs

Multiphase Buck Converter
vs.
Switched Current Power Converter

Revised March 13, 2006

Solutions for

Advanced Performance

Power Supplies

On behalf of Edward Herbert

For more information, contact:

Arnold Alderman
Anagenesis, Inc.
- Los Angeles Office -
222 N. Sepulveda Blvd
Suite 2000
El Segundo, CA, 90245

Tel: 310 662 4764
Fax: 310 662 4767
Mobile: 310 704 7079

Email: arnold.alderman@anagenesis-inc.com

http://anagenesis-inc.com/Herbert.html

http://eherbert.com

Multiphase Buck Converter—vs.—Switched Current Power Converter

Specifications: The hypothetical specifications are based upon Intel ® VR 10.2, with variation to highlight design differences.

Multiphase buck converter

Input: 12 V dc, isolated

Output voltage: per VID:

Output current: 120 A

Phases: four

Spec: VR 10.2

Output impedance: 1.2 mΩ*

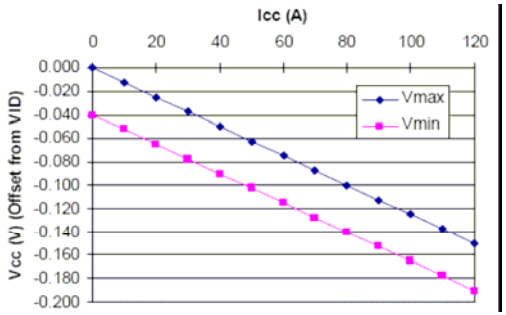

Switched current power converter

Input: 12 A, unisolated

Output voltage: per VID:

Output current: 120 A

Channels: ten

Spec: VR 10.2*

Output impedance, 0.5 mΩ*

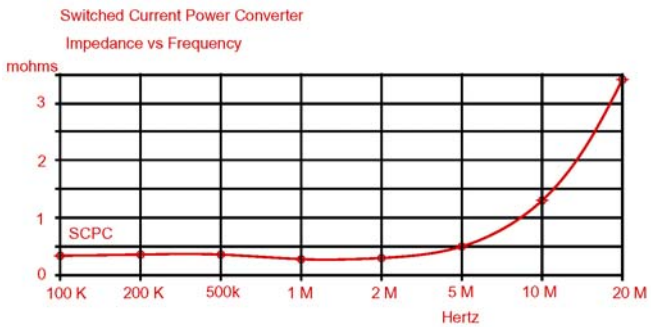

*Note: The high output impedance specified in VR 10.2 has no benefit for the processor. It stands to reason that a higher voltage at a lower current serves no useful purpose and only wastes power. The high impedance is only to accommodate the poor response characteristics of present power supplies.

Multiphase Buck Converter—vs.—Switched Current Power Converter

Overview:

Multiphase buck converter

The multiphase buck converter uses parallel buck converters to control the output current.

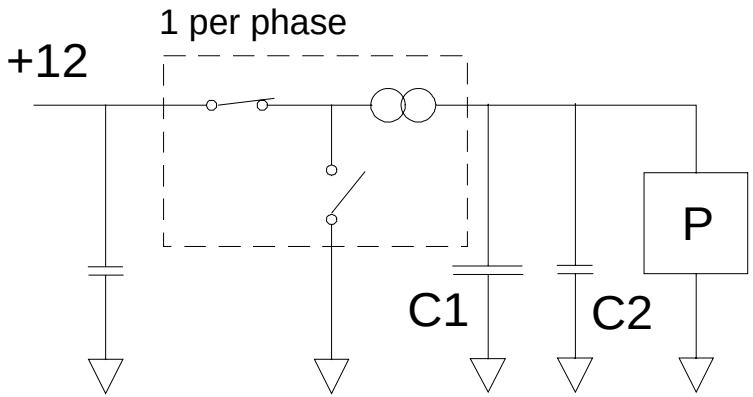

Bandwidth: ≅ 30 kHz

di/dt ≅ 30 A/us

dv/dt ≅ 6 mV/us

Zout ≅ 1.25 mΩ

C1 ≅ 10,000 uF

C2 ≅ 500 uF

Switched current power converter

The SCPC uses a number of parallel current sources that are switched to the output capacitor and the load or to the return.

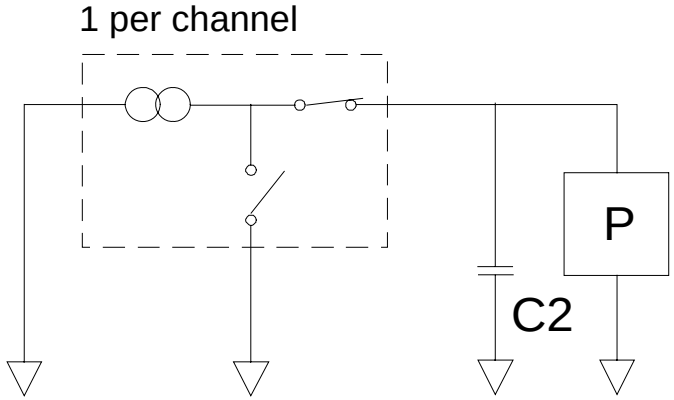

Bandwidth: ≅ 5 MHz or higher.

di/dt — no limit except parasitic impedances.

dv/dt ≅ 40 mV/us (1,600 mV/us with switched charge circuits)

Zout ≅ 0.5 mΩ

C1 – **not used**

C2 ≅ 500 uF

Physical differences,
Magnetics:

Multiphase buck converter

The multiphase buck converter uses an inductor for each phase as an energy storage device.

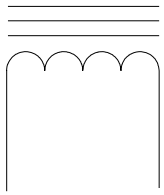

A typical size is 7 x 6 x 5 mm.

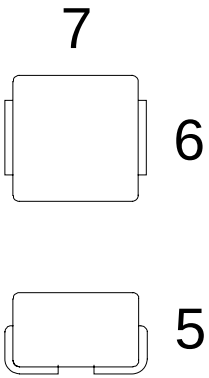

Switched current power converter

The preferred SCPC uses a coaxial transformer.

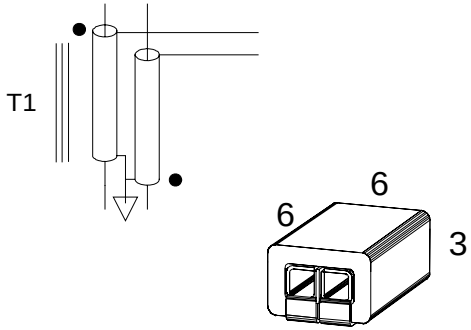

Proposed SCPC module.

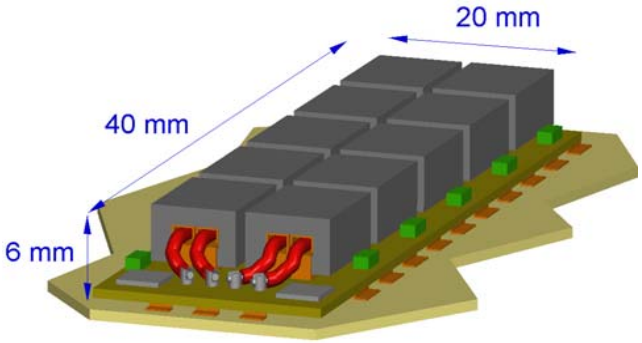

The primary windings are two "U" shaped wires.

Physical differences,
Capacitors:

Multiphase buck converter

The multiphase buck converter uses 7,500 to 9,000 uF of bulk capacitors:

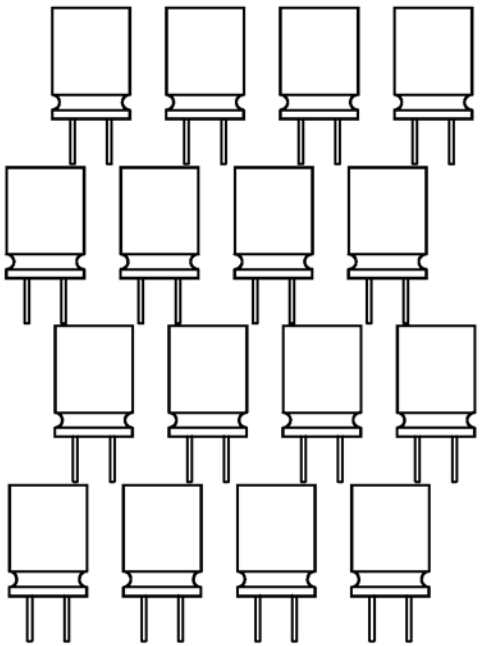

Switched current power converter

The SCPC does not use bulk capacitors.

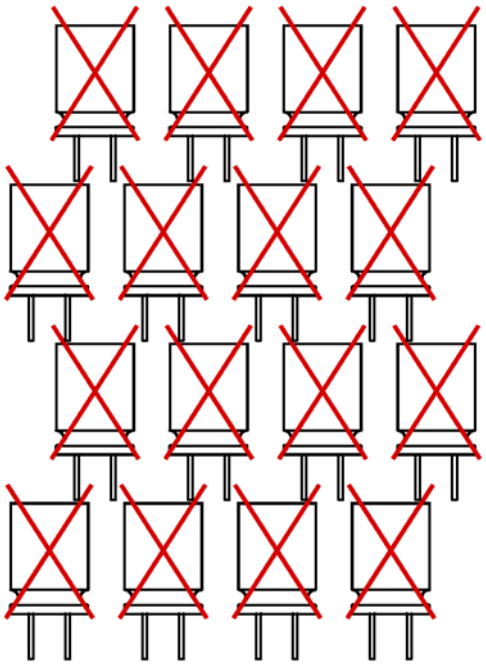

Physical differences,
Power Semiconductors:

The Power Semiconductors are represented by hypothetical die size based upon the current switched, the duty cycle and the voltage.

Multiphase buck converter

The multiphase buck converter uses 20 V MOSFETs

452 total

49	30 A, 8.3 %
64	30 A, 91.7 %
49	30 A, 8.3 %
64	30 A, 91.7 %
49	30 A, 8.3 %
64	30 A, 91.7 %
49	30 A, 8.3 %
64	30 A, 91.7 %

Switched current power converter

All of the secondary power MOSFETs for the SCPC can be integrated into one simple power IC. Max voltage: 5V. To handle 120A, division into 5 identical power ICs is preferred. There is also a driver IC for the transformer primary.

470 total

90	2 channel Simple IC 24 A, 30-100%
90	2 channel Simple IC 24 A, 30-100%
90	2 channel Simple IC 24 A, 30-100%
90	2 channel Simple IC 24 A, 30-100%
90	2 channel Simple IC 24 A, 30-100%
20	Dual primary driver 12 A, 50-50%

See Appendix for more information on the Simple IC.

Multiphase buck converter—vs.—Switched current power converter

Performance differences:
Di/dt.

Multiphase buck converter

Intel ® P4 Spec: Load Dump:

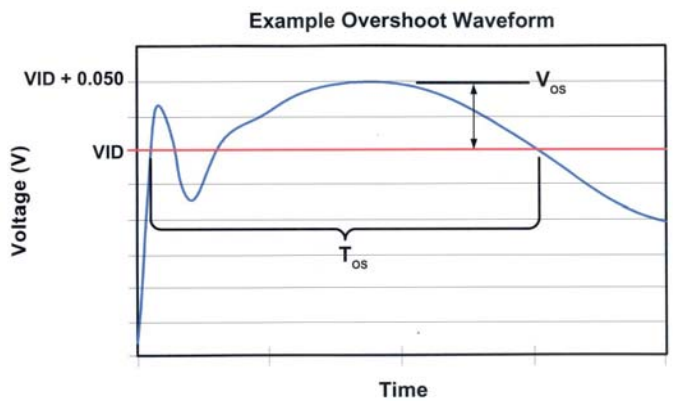

25 us

50 mV overshoot

Switched current power converter

SCPC with Binary Switched Charge:
Simultaneous Load Dump and VID decrease to 0:

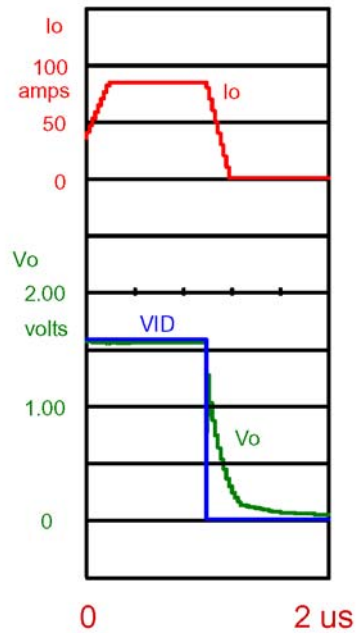

0.5 us

No overshoot

SPICE simulation.

Multiphase buck converter—vs.—Switched current power converter

Performance differences, DV/dt.

Multiphase buck converter

From Intel ® VR 10.2

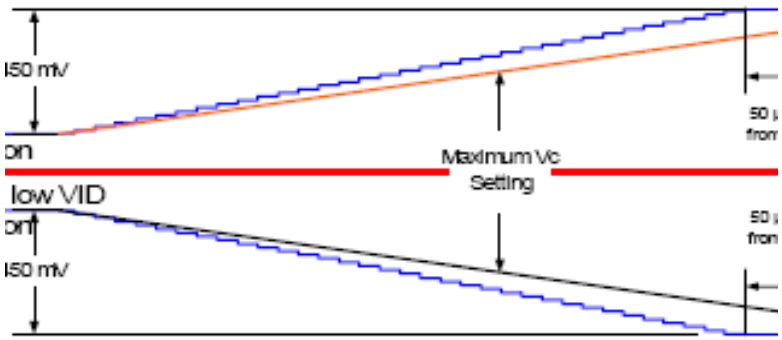

450 mV in180 us

Switched current power converter

Basic SCPC:

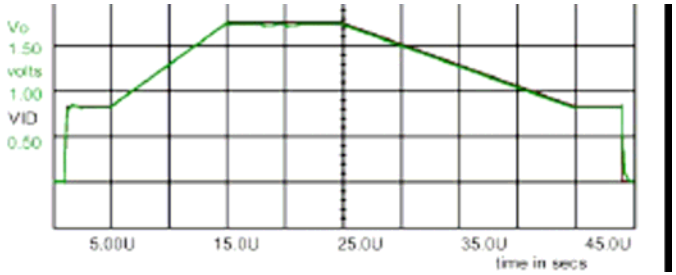

1,000 mV in 10 us

SCPC with Binary Switched Charge Circuits

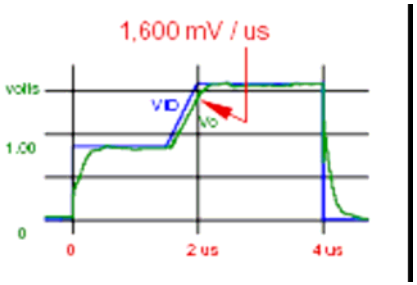

800 mV in 0.5 us

Performance differences,
Output impedance:

Multiphase buck converter	Switched current power converter
1.2 mΩ	0.5 mΩ

Performance differences, Switching Frequency:.

Multiphase buck converter

All phases have switching losses:

1 MHz

Current: Io/4

Duty cycle: Vo/Vi

Switched current power converter

Straight switching:

1 channel switches

1 MHZ

Current: max Io/10

Distributed switching:

10 channels switch

100 kHz

Current: max Io/10

Duty Cycle: Io/max Io

Multiphase buck converter—vs.—Switched current power converter

VRD Input Power:

Multiphase buck converter

Isolated 12 V dc power source
prime power source must include a transformer.

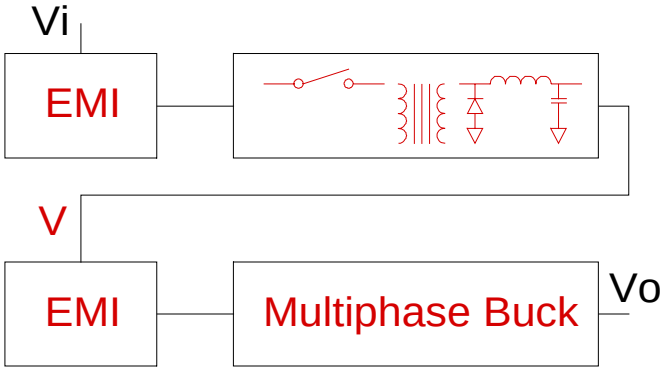

Filtering: The 12 V dc power source is probably a buck converter, requiring emi filtering on its input and a ripple filter capacitor on its output.

The multiphase buck converter also requires emi filtering on its input due to the current pulses on its input..

Switched current power converter

12 A current source input, which need not be isolated.
A transformer isnot be needed.

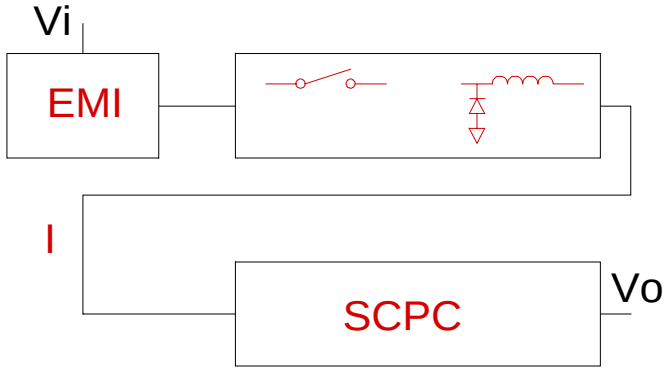

Filtering: The current source is probably a buck converter, requiring an emi filter on its input. No ripple capacitor is used on its output.

The SCPC needs little or no filtering, as the input current is constant.

If only a 12 V dc power source is available in a system, a buck converter configured as a current source is needed at the SCPC input.

Multiphase buck converter—vs.—Switched current power converter

Input Current:

The waveform of the current into the VRM or VRD largely determines the emi filtering that is necessary.

Multiphase buck converter

The multiphase buck converter has a pulsing input current with pulse widths of the period times Vo/Vi.

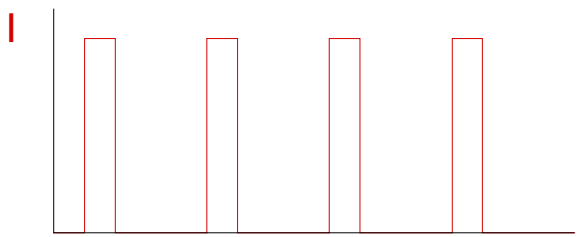

The peak current is the output current divided by the number of phases, Io/n.

Switched current power converter

The input current is a constant dc value equal to the maximum output current divided by the number of channels, Io_{max}/n.

(Reducing the current, or turning it off, are options for a reduced power mode.)

Input Voltage:

Multiphase buck converter

The input voltage is a fixed dc voltage, typically 12 V dc.

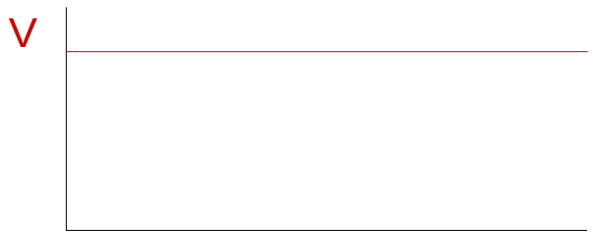

Switched current power converter

The input voltage is proportional to the output current. Its maximum value is the output voltage times the number of channels, n Vo.

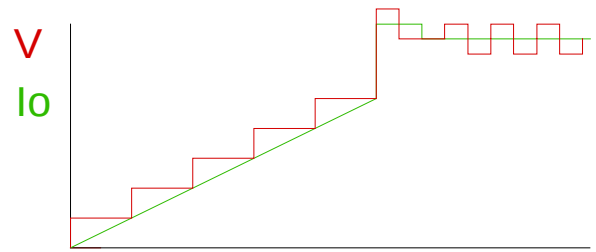

At steady state conditions, the input voltage will have a peak to peak ripple voltage equal to the output voltage, Vo.

Control:

The control ICs of both the multiphase buck converter and the SCPC can be highly integrated, so any cost differential is small.

Multiphase buck converter

1. The response time is limited by the di/dt of the inductors.

2. The positive going and negative going di/dt differ by an order of magnitude. There is a significant overshoot and a long recovery time after a load dump.

3. The current of each phase must be measured and controlled.

4. The output voltage is measured and fed back as the control input.

Switched current power converter

1. The response time is limited by the propagation delay through comparators, digital logic, the MOSFETs and their drivers.

2. The positive going and negative going di/dt are the same. There is no overshoot and the recovery time is less than 2 us after a load dump.

3. No current measurement is used.

4. The total charge on the output capacitors is measured as the control input.

Multiphase buck converter—vs.—Switched current power converter

Failure modes and effects:

Multiphase buck converter

Several failure modes of a buck converter can result in the input voltage appearing on the output.

Switched current power converter

No single failure in the transformer coupled SCPC will apply the input voltage to the output.

Appendix:

Proposed integrated circuit (IC): Schematic:

Following, there is a discussion of the MOSFET switches and a method of integrating them into a Simple Power IC. The circuit being discussed is the following, and in particular, the MOSFET switches.

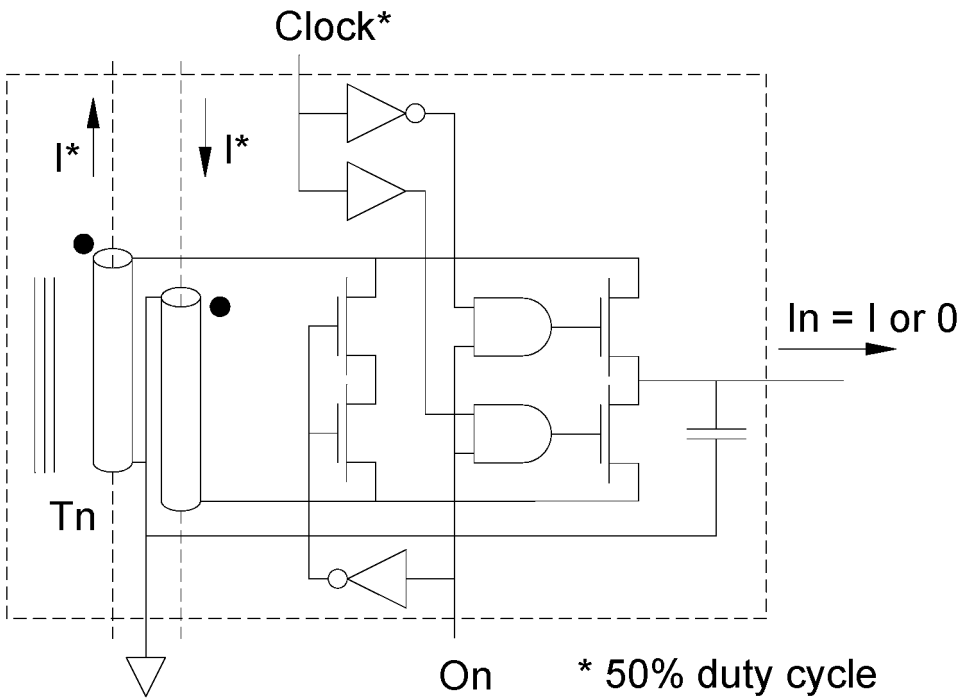

See: Http://eherbert.com for more information on the Simple Power IC.

Appendix:
Integrating the synchronous rectifiers:

The synchronous rectifier MOSFETs can be integrated into one die with a common drain at the bottom of the substrate. A trench structure can be used, with half of the trenches connected to each source, to make back-to-back MOSFETs with a common drain.

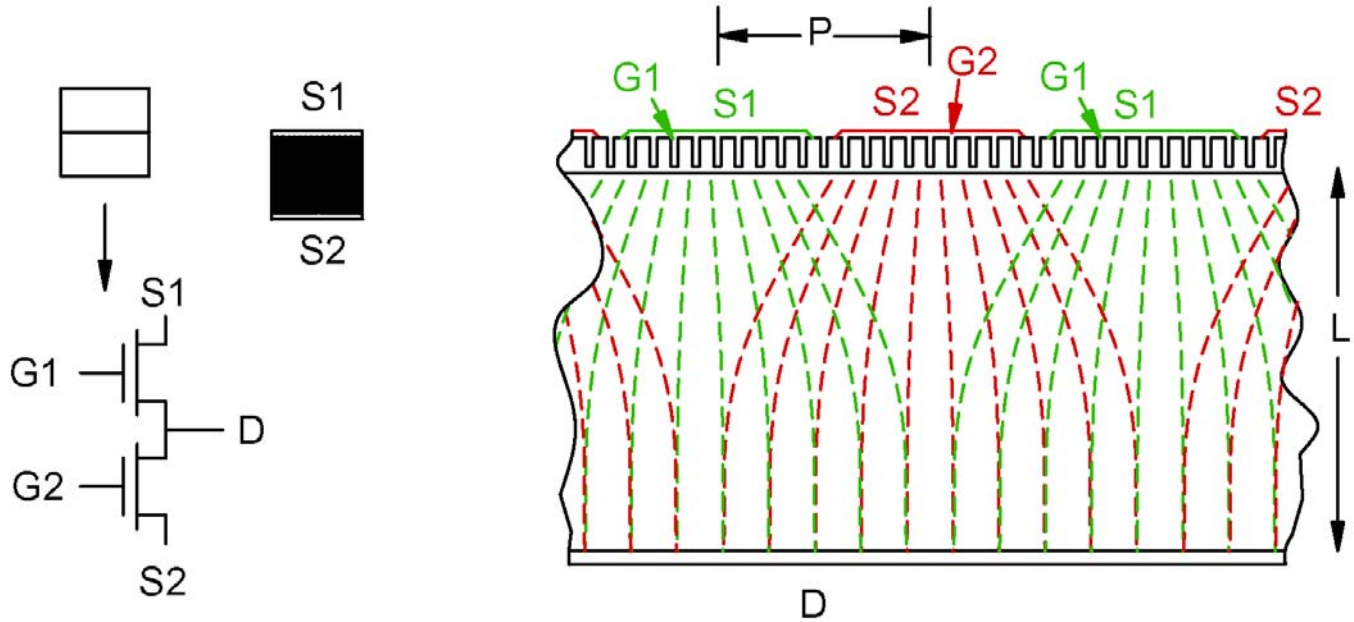

If the two sources are highly interdigitated, such that the pitch P is small compared to the thickness of the substrate L, then the currents will diffuse sufficiently that the source from which it originated will be indistinguishable at the drain connection. The common drain will have twice the area and half the current density, for significantly reduced impedance compared to two individual MOSFETs of the same total area.

More important, the high frequency effects (skin depth) will not be present in the drain connection for 100 % duty-cycle operation.

This IC will have applications far beyond switched current power converters, as it will be a superior synchronous rectifier for many other applications, particularly when paired with a coaxial transformer.

Appendix:
Integrating the ac shorting switch:

In the schematic, the shorting switch is shown as back-to-back MOSFETs. In a practical IC, the MOSFETs can be integrated with a common drain and a common gate.

The shorting switches can be made using trench MOSFET construction all having a common gate. In any one trench, one side is connected to the first source, S1 and the other side is connected to the second source, S2. The metallization is striped, so that the facing sides of adjacent trenches have the same source. When on, the current will flow from source to source in either direction through the buried drain under the trenches. Because the current does not have to flow through the substrate and the external drain connection, the resistance will be very low.

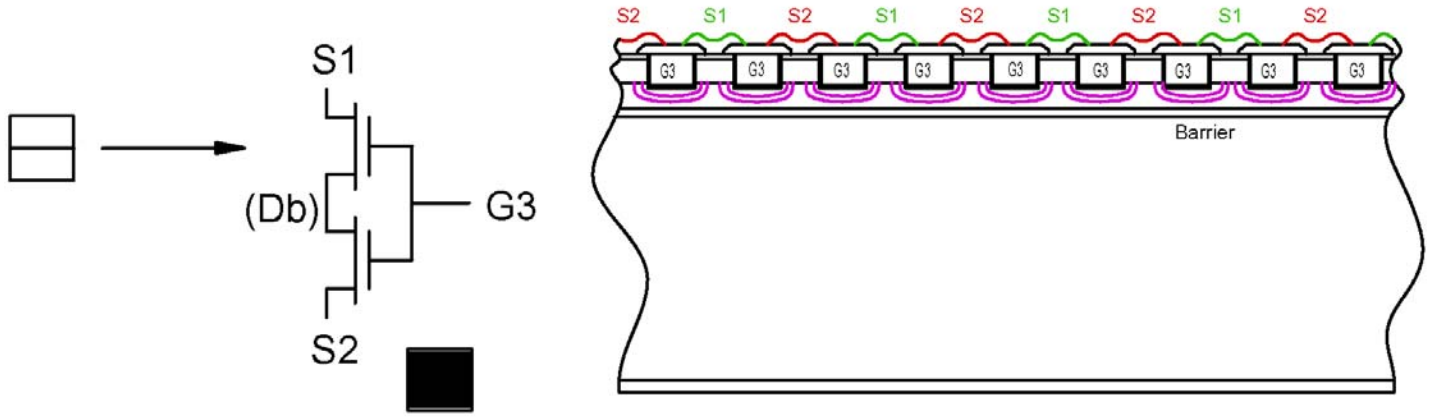

If used as a low voltage ac switch alone, no isolation to the substrate is needed. However, it is contemplated to integrate this circuit with the synchronous rectifiers, in which case an isolation barrier is needed, either an insulating layer or a junction barrier.

This IC will have applications far beyond switched current power converters, as it will be a superior bi-directional switch for many other applications. If the bi-directional switch is used as a separate component, the barrier is not required.

Appendix:
Integrating the shorting switches into synchronous rectifiers:

Starting with the interdigitated synchronous rectifier design, the shorting switches can be integrated into the margins between the sources. A barrier is needed between the sources, and this region can be enlarged to accommodate the shorting switches from the previous page.

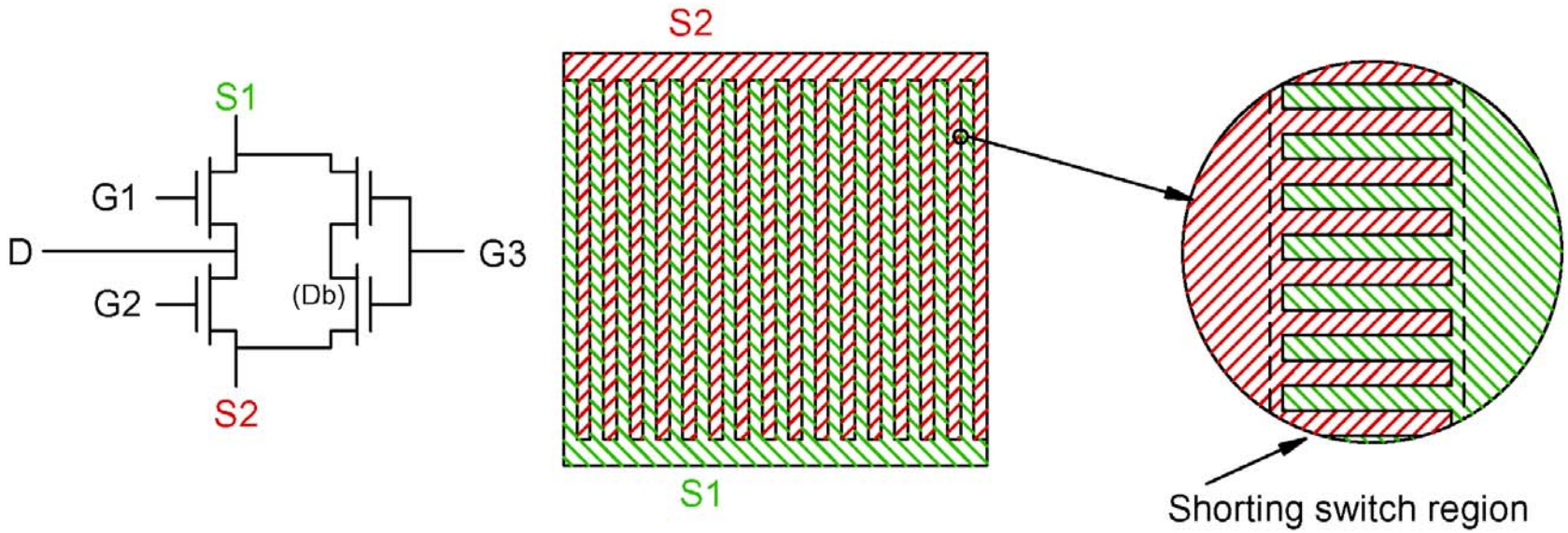

The gate connections are not shown. The die size will be increased somewhat to accommodate the shorting switches, but far less than the area that would be required by a separate die with separate source terminations. This will further increase the drain area, improving the synchronous rectifier because the current density is further reduced at the common drain.

This IC will have applications far beyond switched current power converters. When paired with a coaxial transformer, it can be used for a transformer with variable turns.